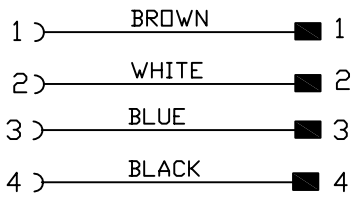

CONNECTOR FEATURES	TYPE CONCTACT M8	FEMALE 4POLES
	TYPE CONCTACT M12	MALE 4POLES
	CABLE LENGHT	15.000mm
	PROTECTION CLASS	IP67
	NUMBER OF CONTACTS CONNECTED	n°4
CABLE FEATURES	H.T.P. CABLE CODE	A
	NUMBER OF CONDUCTORS	n°4
	CONDUCTOR SECTION	0.25mm
	CABLE MATERIAL	PVC
	COATING COLOUR	BLACK
	CONDUCTOR INSULATION MATERIAL	PVC

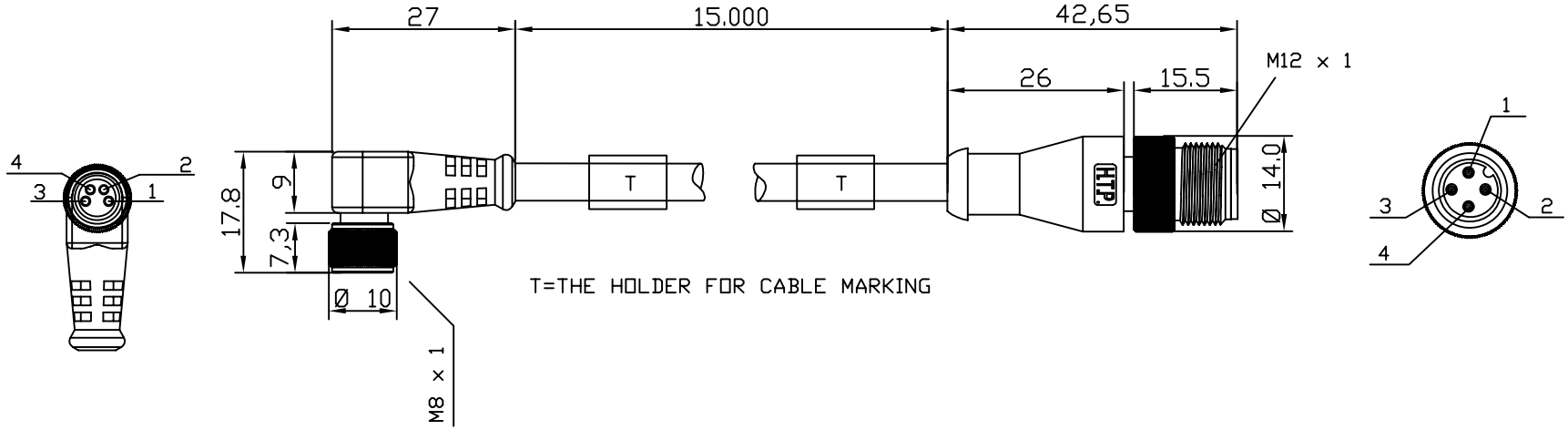

TOLLERANZE		DISEGNATORE LORENZO CIMMINO	DATA 10-07-08	SCALA 1:1	DISEGNO N.
U.d.M	ANGOLO	CONTROLLATO			
DESCRIZIONE EXTENSION M8 FEMALE 90° 4POLES+M12 180°MALE 4POLES WITH CABLE PVC/PVC,4X0.25mm^2,BLACK LENGHT:15m			TIPO M8		MATERIALE
HTP High Tech Products		H.T.P. HIGH TECH PRODUCTS	CODICE 08FA4A1512MD		