CONNECTOR FEATURES	PRODUCT TYPE	7/8"-7/8" EXTENSION
	CONTACT TYPE	FEMALE-MALE
	CABLE LENGHT	1000mm
	7/8" FEMALE 180°	4 POLES
	7/8" MALE 180°	4 POLES
	PROTECTION CLASS	IP68
	NUMBER OF CONTACTS CONNECTED	N°4
	CONNECTORS WITH H.T.P.LOGO	
	EXTENSION WITHOUT THE HOLDER FOR CABLE MARKING	
CABLE FEATURES	H.T.P.CABLE CODE	A
	NUMBER OF CONDUCTORS	N°4
	CONDUCTOR SECTION	1.5mm²
	CABLE MATERIAL	PVC CEI2022
	COATING COLOUR	BLACK
	CONDUCTOR INSULATION MATERIAL	PVC

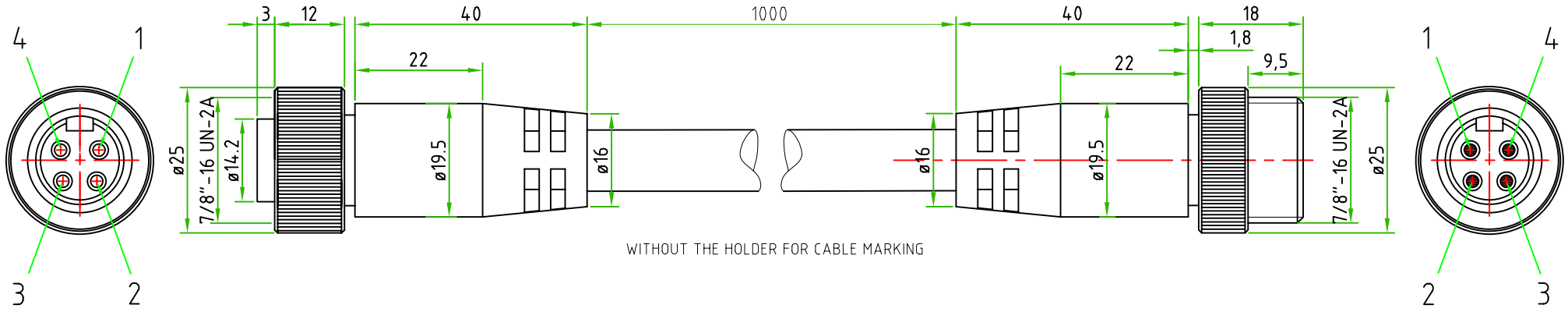

WITHOUT THE HOLDER FOR CABLE MARKING

TOLLERANZE		DISEGNATORE LORENZO CIMMINO	DATA 11-01-11	SCALA 1:1	DISEGNO
U.d.M	ANGOLO	CONTROLLATO			
DESCRIZIONE EXTENSION 7/8" FEMALE,STRAIGHT 180°,4 POLES,WITH CABLE PVC/PVC, CEI2022,BLACK,4X1.5mm²,L=1m+7/8" MALE,STRAIGHT 180°,4POLES			TIPO EXTENSION 7/8"		MATERIALE
High Tech Products HTP		H.T.P. HIGH TECH PRODUCTS	CODICE 78FD4A1Z78MD		