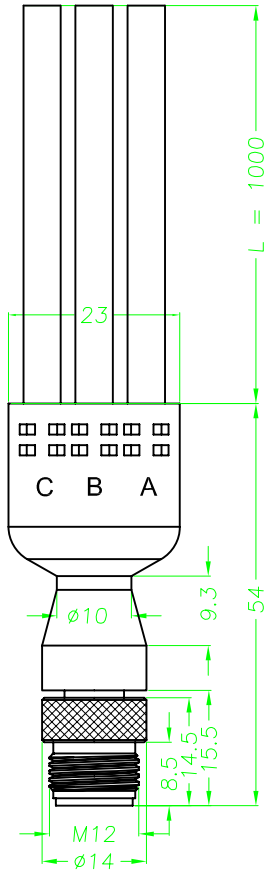

CONNECTOR FEATURES	TYPE CONNECTOR	Y M12
	TYPE CONTACT	MALE
	NUMBER OF CONTACTS	n°5
	CABLE LENGHT	1000mm
	PROTECTION CLASS	IP69K
	STRIPPING	NO
	PEELING	NO
CABLE FEATURES	H.T.P. CABLE CODE	MALE
	NUMBER OF CONDUCTORS	n°3
	CONDUCTOR SECTION	0.34mm^2
	CABLE MATERIAL	PVC
	COATING COLOUR	BLACK
	CONDUCTOR INSULATION MATERIAL	PVC

ELECTRICAL SCHEME:

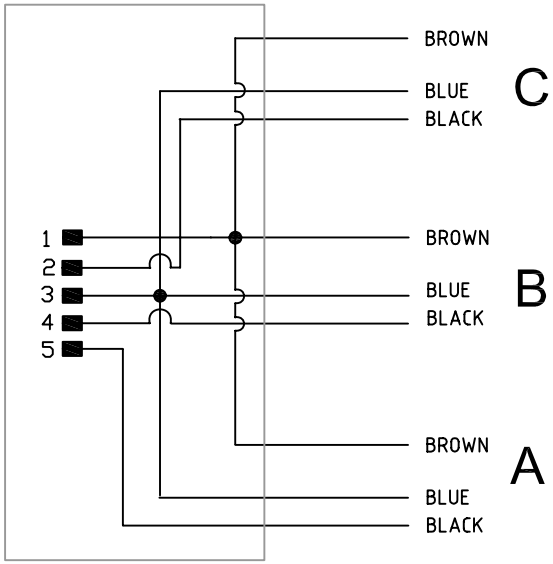

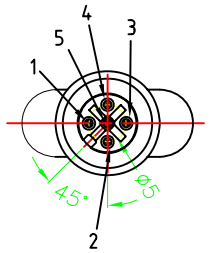

TOLLERANZE		DISEGNATORE LORENZO CIMMINO	DATA 13.03.09	SCALA 1:1	DISEGNO N.
U.d.M	ANGOLO	CONTROLLATO			
DESCRIZIONE TRIPSILON WITH N° 3 CABLES PVC/PVC BLACK 3X0,34mm^2,BLACK,LENGHT 1m			TIPO Y 3 WAY		MATERIALE
High Tech Products HTP H.T.P. HIGH TECH PRODUCTS			CODICE A5B1Z-3		