Rev.	Modify	Date	Signed	Approved

Rev.	Modify	Date	Signed	Approved

Rev.	Modify	Date	Signed	Approved

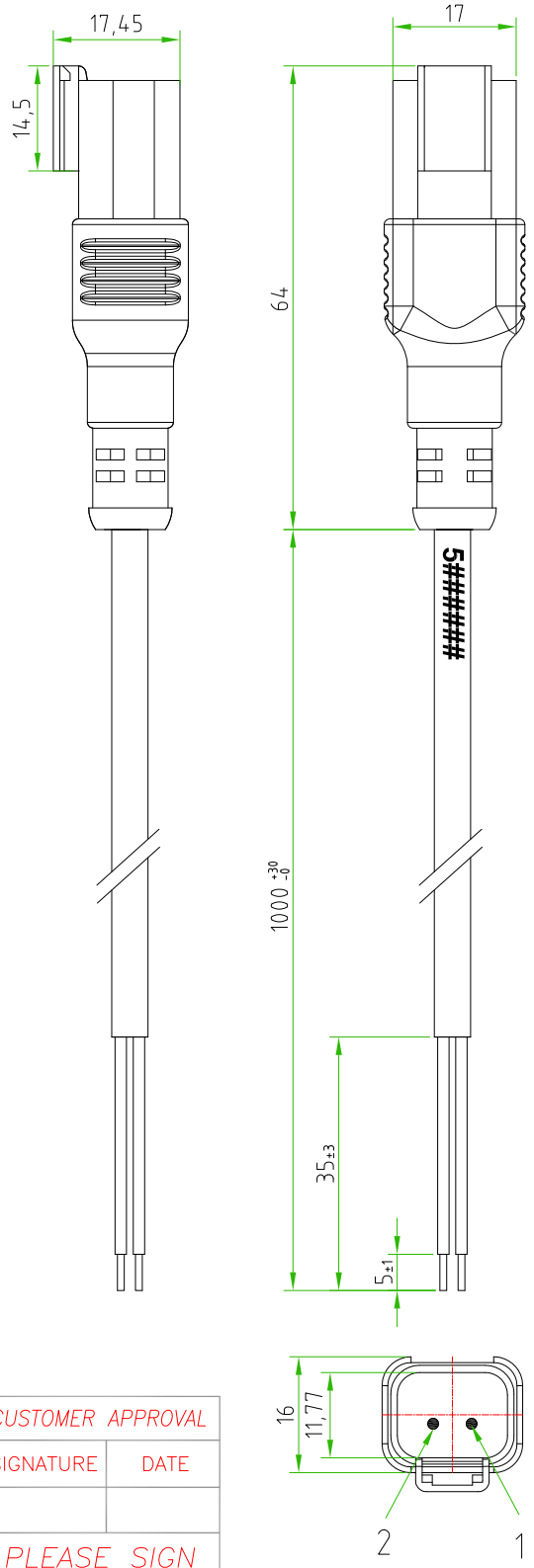

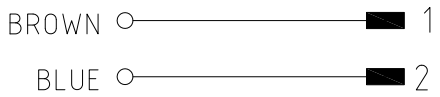

CONNECTOR FEATURES	PRODUCT TYPE	AUTOMOTIVE CONNECTOR (INTERCHANGEABLE WITH DEUTSCH CONNECTOR DT04 SERIES)
	AUTOMOTIVE CONNECTOR TYPE	STRAIGHT 180° MALE 2 POLES
	NUMBER OF CONTACTS CONNECTED	N°2
	CONNECTOR COLOUR	BLACK
	CIRCUIT TYPE	WITHOUT ELECTRONIC
	RATED VOLTAGE	250V AC/300V DC
	CONNECTOR WITHOUT ANY LOGO	
CABLE FEATURES	H.T.P.CABLE CODE	CAVO A1
	NUMBER OF CONDUCTORS	N°2
	CONDUCTORS SECTION	0,5mm²
	CABLE MATERIAL	PVC IEC332-1 H03VVF
	COATING COLOUR	BLACK
	CONDUCTORS INSULATION MATERIAL	PVC
	CABLE LENGHT	1000mm
	STRIPPING	35mm
	PEELING AND TINNING	5mm
	ON THE CABLE,NEAR THE CONNECTOR HEAD,MUST BE SILK PRINTED THE H.T.P. PRODUCTION DATE CODE 5######	

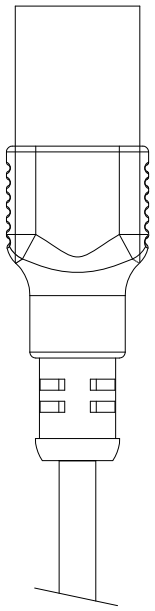

CUSTOMER APPROVAL	
SIGNATURE	DATE
PLEASE SIGN AND RETURN	

A4

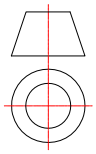

Designer	SUGLIANI R.	Date	2019-06-10	Tollerance	±0,3	Units:	mm	Series	DEUTCH CONNECTOR
Approved	CIMMINO L.	Date	2019-06-10	Scale	1:1	Size:	A4	Customer code:	

Drawing n. 1-1

HTP High Tech Products S.R.L.

DESCRIPTION

AUTOMOTIVE CONNECTOR,STRAIGHT 180°,MALE,2POLES,TRASPARENT, WITHOUT ELECTRONIC 250V AC / 300V DC,WITH CABLE PVC/PVC IEC332-1 H03VVF,2x0,5mm², BLACK, L=1m CONNECTORS WITHOUT H.T.P.LOGO

H.T.P.PART NUMBER

HDCMD2000A11Z

H.T.P. High Tech Products S.R.L. Via Lesina,45 -24030- Brembate di Sopra (Bg) - ITALY Phone:+39.035692509 Fax:+39.035203291 E-mail: info@webhtp.eu Web: http://www.webhtp.eu/

ALL RIGHTS ARE RESERVED.