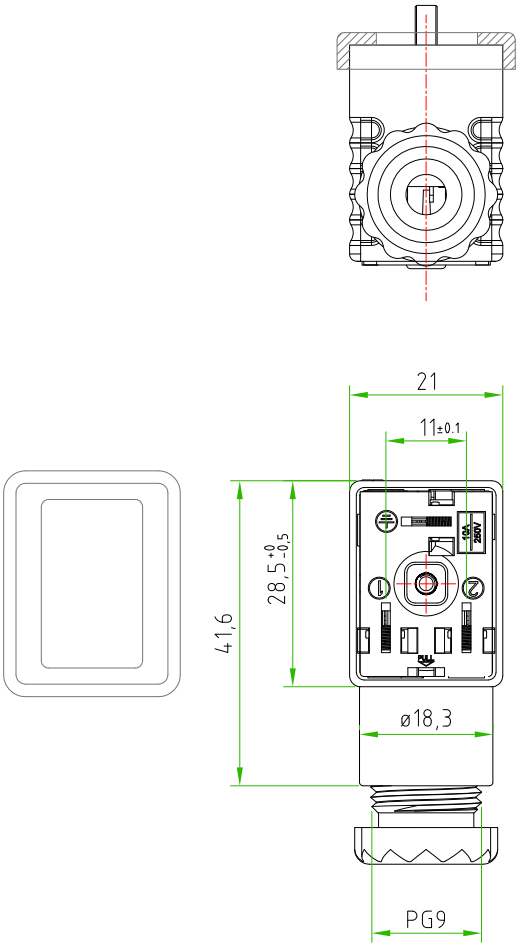

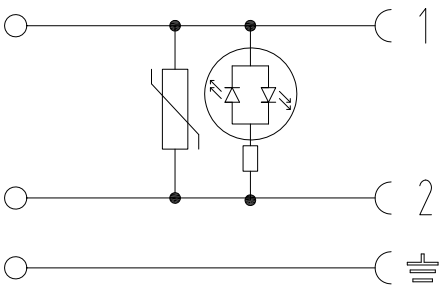

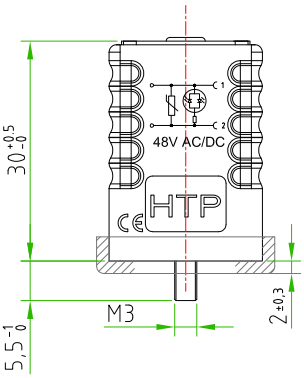

CONNECTOR FEATURES	PRODUCT TYPE	INDUSTRIAL STANDARD FORM B FIELD ATTACHABLE.
	HOUSING MATERIAL/COLOUR	PA66 /TRANSPARENT
	PRESS-CABLE MATERIAL/COLOUR	PA66 /BLACK
	INTRENAL CORE MATERIAL/COLOUR	PA66 /BLACK
	HEIGHT HOUSING	30mm
	CONTACTS SPACING	11mm
	CONTACTS TYPE	SCREW CONTACTS(with protection plate)
	NUMBER OF POLES	2POLES+EARTH
	EARTH POSITIONING	H.12 (TURNABLE)
	CABLE EXIT	PG9
	SUITABLE CABLE	FROM ø6mm TO ø8mm
	MAX.CONDUCTOR SIZE	1,5mm²
	PROTECTION CLASS	IP67
	CIRCUIT TYPE	BIPOLAR RED LED+ VARISTOR
	RATED VOLTAGE	48V AC/DC
	CONNECTOR TEMPERATURE RANGE	from -40°C to +90°C
	GASKET TYPE	PROFILED NBR
	FIXING SCREW	M3X0,5 L=32,5mm
	CONNECTOR WITH H.T.P. LOGO	

CUSTOMER APPROVAL	
SIGNATURE	DATE
PLEASE SIGN AND RETURN	

Rev.	Modify	Date	Firma	Approved

Rev.	Modify	Date	Firma	Approved

Rev.	Modify	Date	Signed	Approved

A4

Designer	SUGLIANI R.	Date	2018-02-21	Tollerance ±0,2	Units: mm	Series INDUSTRIAL STANDARD (form B)	Drawing n. 1/1
Approved	CIMMINO L.	Date	2018-02-21	Scale 1:1	Size: A4	Customer code:	

HTP High Tech Products S.R.L.

DESCRIPTION

RECTANGULAR CONNECTOR INDUSTRIAL STANDARD FORM B,FIELD ATTACHABLE, 2P.+PE, WITH BIPOLAR RED LED + VARISTOR, 48V,TRANSPARENT HOUSING, PG9. CONNECTOR WITH H.T.P. LOGO.

H.T.P.PART NUMBER

M1TS2VL5

H.T.P. High Tech Products S.R.L. Via Lesina,45 -24030- Brembate di Sopra (Bg) - ITALY Phone:+39.035692509 Fax:+39.035203291 E-mail: info@webhtp.eu Web: http://www.webhtp.eu/

ALL RIGHTS ARE RESERVED.